DRG.No. C51590/A	TITLE	RS2/TA2 (2 WAY) DISABLED REFUGE AND TOILET ALARM OPTIONS – SCHEMATICS	REF.

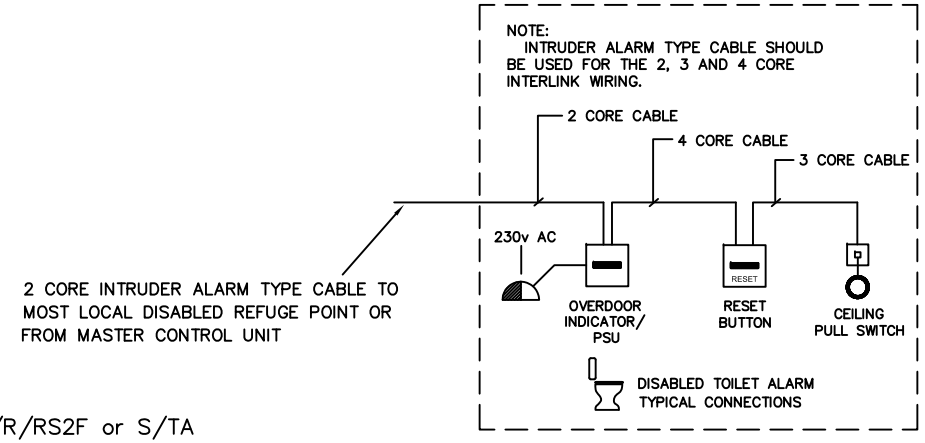

ORB/R/RS2F or S/TA

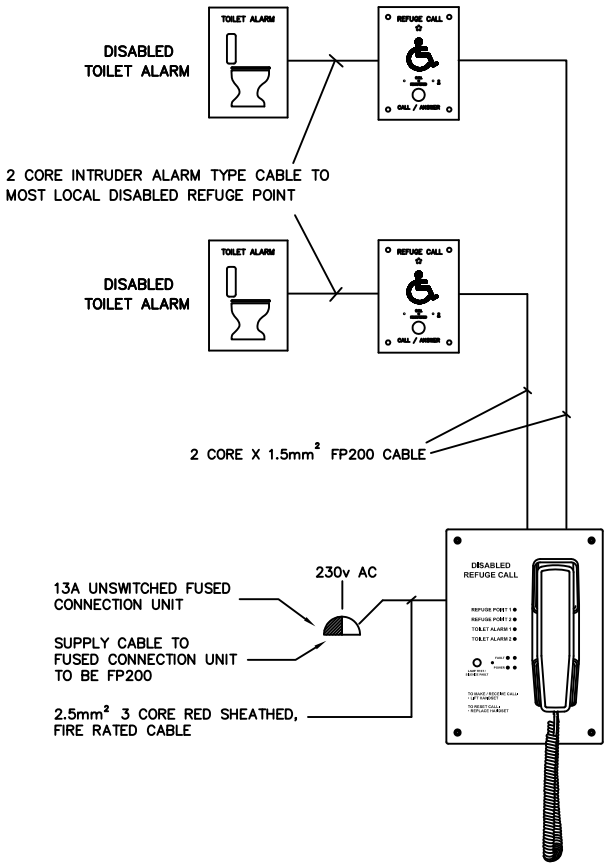

ORB/R/RS2F or S/TA

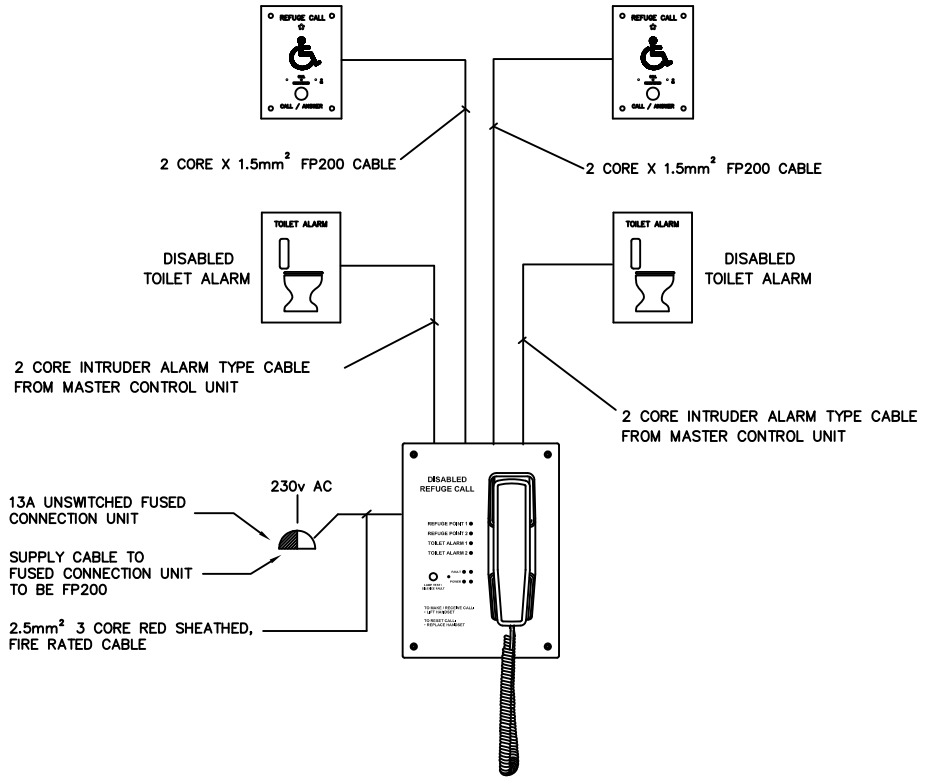

ISSUE	DATE	MODIFICATION	DRN.	CHD.

CAMEO SYSTEMS LTD
29 HAVILAND ROAD
FERNDOWN INDUSTRIAL ESTATE
WIMBORNE, DORSET, BH21 7SA ENGLAND
TEL (01202)892088
FAX (01202)861449

DRAWN	DATE	SCALE	CHECKED	APRD.
K.C.B.	29.08.17	---		

DRAWING NO.	ISSUE
C51590	A